Manufacturers:
Greenheck Fan Corporation, PO Box 410, 400 Ross Ave, Schofield, WI 54476
The Airolite Company, LLC, PO Box 410, 400 Ross Ave, Schofield, WI 54476

Product Lines:
Greenheck Louver Model EVH-501D, and equivalent nameplated Airolite Louver Model SCV501MD.

Compliance Method:
The above products have been evaluated for compliance with the requirements of the Florida Department of Business and Professional Regulation for Statewide Acceptance per Rule 61G20-3 of the FL Administrative Code and comply with the 8th Edition (2023) Florida Building Code.

Product Description:
Aluminum louver with vertical fixed blades and butt-type frame corner construction with blade/frame material as noted in its Miami-Dade NOA.

Performance Summary (for entire product line):
Tested design pressure is +/- 130 PSF. Passed ANSI/AMCA Standard 540-13 (including TAS 203-94) at missile level E (80 fps impact speed). Passed ANSI/AMCA Standard 550-09. Passed TAS 201-94 (large missile, 50 fps impact speed), TAS 202-94, and TAS 203-94. Product can be used inside and outside of the HVHZ and is impact resistant.

Performance Standards:
1. ANSI/AMCA Standard 540-13, Test Method for Louvers Impacted by Wind Borne Debris.
2. ANSI/AMCA Standard 550-09, Test Method for High Velocity Wind Driven Rain Resistant Louvers.
3. FBC TAS 201-94, Impact Test Procedures.
4. FBC TAS 202-94, Criteria for Testing Impact & Non-Impact Resistant Building Envelope Components Using Uniform Static Air Pressure.
5. FBC TAS 203-94, Criteria for Testing Products Subject to Cyclic Wind Pressure Loading.

Supporting Technical Documents:
1. Approval Documents:
    a. NOA 25-0317.02 for EVH-501D, approved on 05/15/2025
    b. NOA 25-0317.02 for SCV501MD, approved on 05/15/2025
2. Listing Document:
    a. AMCA License Agreement to use the AMCA Listing Label for ANSI/AMCA 540 (Enhanced Impact Missile Level E, 80 fps) and ANSI/AMCA 550:
        i. EVH-501D, dated 7/21/2021
        ii. SCV501MD, dated 7/22/2021
3. Test Reports:
    a. E4766.01-602-44, signed and sealed on 02/06/2015 by Shawn G. Collins, P.E., Architectural Testing, Inc., Schofield, WI
        i. ANSI/AMCA 550-09
    b. E4766.02-602-18, signed and sealed on 03/15/2015 by Shawn G. Collins, P.E., Architectural Testing, Inc., Schofield, WI
        i. FBC TAS 201-94, FBC TAS 202-94, and FBC TAS 203-94
    c. E4766.03-602-18, signed and sealed on 03/16/2015 by Shawn G. Collins, P.E., Architectural Testing, Inc., Schofield, WI
        i. ANSI/AMCA Standard 540-13 and FBC TAS 203-94
    d. QCT24-7460.01, signed and sealed on 01/13/2025 by Arlen Fisher, P.E., Quast Consulting & Testing, Inc., Mosinee, WI
        i. FBC TAS 201-94, FBC TAS 202-94, and FBC TAS 203-94

Limits and Conditions Use:

1. Limits/Conditions are as per their Miami-Dade NOA and AMCA Listing documents.
2. Constructed from materials as noted in the NOA Approval Document.
3. Maximum Design Pressure is +/- 130 PSF.
4. Maximum Panel Size is 72” wide x 120” high or 120” wide x 72” high.
5. Rated to be used inside and outside of the HVHZ.
6. Impact resistant for both Basic Impact Missile Level D (50 fps) and Enhanced Impact Missile Level E (80 fps).
7. With blades fully open, the louver may be installed in a location where the room behind the louver is NOT designed to drain water penetrating into the room and the room may house NON-water resistant/proof equipment, components, and/or supplies.

Installation:
Must be installed in accordance with its Miami-Dade NOA document.

Certification of Independence:
Design Dynamics, Inc. and Robert V. Nangia, P.E. do not have and will not acquire a financial interest in any company manufacturing or distributing the products for which this report is being issued. Design Dynamics, Inc., and Robert V. Nangia, P.E. do not have and will not acquire a financial interest in any other entity involved in the approval process of the above listed products.

Statement of Standard Equivalency:
The requirements of ANSI/AMCA 550-09 (as tested) meet or exceed the requirements of ANSI/AMCA 550-15 (Rev 9-18) for the purpose of evaluating the above referenced product testing for High Velocity Wind Driven Rain per the 8th Edition (2023) Florida Building Code.

Evaluation Report By and PE Stamp:

Prepared by:

Jeffrey T. Shingler, M.ASCE, M.CFSEI
Design Dynamics, Inc.

Reviewed by:

Mr. Nangia P.E.
Consulting Engineer
Structural/Civil
7423 Hollow Ridge Dr.
Houston, TX 77095

This document was produced under the direct supervision of Mr. Nangia P.E.

STRUCTURAL ONLY
ROBERT V. NANGIA
LICENSE
No. 69555
6/16/25
STATE OF FLORIDA
PROFESSIONAL ENGINEER

This item has been electronically signed and sealed by Robert V Nangia PE/SE using a Digital Signature and data. Printed copies of this document are not considered signed and sealed and the signature must be verified on any electronic copies

Robert Nangia
Digitally signed by Robert Nangia
Date: 2025.06.16 17:57:07 -05'00'

MIAMI-DADE COUNTY
PRODUCT CONTROL SECTION
11805 SW 26 Street, Room 208
Miami, Florida 33175-2474
T (786) 315-2590 F (786) 315-2599
www.miamidade.gov/building

DEPARTMENT OF REGULATORY AND ECONOMIC RESOURCES (RER)
BOARD AND CODE ADMINISTRATION DIVISION

NOTICE OF ACCEPTANCE (NOA)

Greenheck Fan Corporation
1110 Greenheck Drive (PO Box 410)
Schofield, WI 54476

SCOPE:

This NOA is being issued under the applicable rules and regulations governing the use of construction materials. The documentation submitted has been reviewed and accepted by Miami-Dade County RER-Product Control Section to be used in Miami Dade County and other areas where allowed by the Authority Having Jurisdiction (AHJ).

This NOA shall not be valid after the expiration date stated below. The Miami-Dade County Product Control Section (In Miami Dade County) and/or the AHJ (in areas other than Miami Dade County) reserve the right to have this product or material tested for quality assurance purposes. If this product or material fails to perform in the accepted manner, the manufacturer will incur the expense of such testing and the AHJ may immediately revoke, modify, or suspend the use of such product or material within their jurisdiction. RER reserves the right to revoke this acceptance if it is determined by Miami-Dade County Product Control Section that this product or material fails to meet the requirements of the applicable building code.

This product is approved as described herein and has been designed to comply with the Florida Building Code, including the High Velocity Hurricane Zone.

DESCRIPTION: Model EVH-501D Aluminum Louver

APPROVAL DOCUMENT: Drawing No. **EVH-501D**, titled "EVH-501D", sheets 1 through 14 of 14, dated 04/01/2015, prepared by the Greenheck Fan Corporation, signed and sealed by Robert V. Nangia, P.E., on 04/04/2025, bearing the Miami-Dade County Product Control Revision stamp with the Notice of Acceptance number and expiration date by the Miami-Dade County Product Control Section.

MISSILE IMPACT RATING: Large and Small Missile Impact Resistant

LABELING: Each unit shall bear a permanent label with the manufacturer's name or logo, Schofield, WI or Shelby, NC, model/ series, and the statement reading: "Miami-Dade County Product Control Approved", unless otherwise noted herein.

RENEWAL of this NOA shall be considered after a renewal application has been filed and there has been no change in the applicable building code negatively affecting the performance of this product.

TERMINATION of this NOA will occur after the expiration date or if there has been a revision or change in the materials, use, and/or manufacture of the product or process. Misuse of this NOA as an endorsement of any product, for sales, advertising or any other purposes shall automatically terminate this NOA. Failure to comply with any section of this NOA shall be cause for termination and removal of NOA.

ADVERTISEMENT: The NOA number preceded by the words Miami-Dade County, Florida, and followed by the expiration date may be displayed in advertising literature. If any portion of the NOA is displayed, then it shall be done in its entirety.

INSPECTION: A copy of this entire NOA shall be provided to the user by the manufacturer or its distributors and shall be available for inspection at the job site at the request of the Building Official.

This NOA **renews and revises NOA No. 23-1030.04** and consists of this page 1 and evidence pages E-1, E-2 and E-3, as well as approval document mentioned above.

The submitted documentation was reviewed by **Carlos M. Utrera, P.E.**

MIAMI-DADE COUNTY APPROVED

05/14/25

NOA No. 25-0317.02
Expiration Date: August 6, 2030
Approval Date: May 15, 2025

Greenheck Fan Corporation

NOTICE OF ACCEPTANCE: EVIDENCE SUBMITTED

1. EVIDENCE SUBMITTED UNDER PREVIOUS NOA's

A. DRAWINGS

1. Manufacturer's die drawings and sections.
(Submitted under NOA No. 15-0415.05)

2. Drawing No. **EVH-501D**, titled "EVH-501D", sheets 1 through 9 of 9, dated 04/01/15, prepared by the manufacturer, signed and sealed by Chander P. Nangia, P.E.
(Submitted under NOA No. 15-0415.05)

B. TESTS

1. Test reports on: 1) Uniform Static Air Pressure Test, Loading per FBC, TAS 202-94
2) Large Missile Impact Test per FBC, TAS 201-94
3) Cyclic Wind Pressure Loading per FBC, TAS 203-94
along with marked-up drawings and installation diagram of Model EVH-501D aluminum vertical louvers, prepared by Intertek/Architectural Testing, Inc, Report No. **E4766.02-602-18,** dated 03/13/15, signed and sealed by Shawn G. Collins, P.E.
(Submitted under NOA No. 15-0415.05)

2. Test Report on High Velocity Wind Driven Rain Resistance per AMCA 550-09 of a Model EVH-501D aluminum vertical louver, prepared by Intertek/Architectural Testing, Inc, Test Report No. **E4766.01-602-44,** dated 02/06/15, signed and sealed by Shawn G. Collins, P.E.
(Submitted under NOA No. 15-0415.05)

C. CALCULATIONS

1. Structural load calculations prepared by manufacturer, dated 04/01/15, signed and sealed by Chander P. Nangia, P.E.
(Submitted under NOA No. 15-0415.05)

D. QUALITY ASSURANCE

1. Miami-Dade Department of Regulatory and Economic Resources (RER)

E. MATERIAL CERTIFICATIONS

1. None.

F. STATEMENTS

1. Statement letter of code conformance to the **FBC 7th Edition (2020)** and of no financial interest, dated May 13, 2021, issued by manufacturer, signed and sealed by Chander P. Nangia, P.E.
(Submitted under NOA No. 21-0526.10)

Carlos M. Utrera, P.E.
Product Control Examiner
NOA No. 25-0317.02
Expiration Date: August 6, 2030
Approval Date: May 15, 2025

NOTICE OF ACCEPTANCE: EVIDENCE SUBMITTED

1. EVIDENCE SUBMITTED UNDER PREVIOUS NOA's (CONTINUED)

G. OTHERS

1. Notice of Acceptance No. **20-0602.02**, issued to Greenheck Fan Corporation for their Model EVH-501D Aluminum Louver, approved on 06/25/20 and expiring on 08/06/25.

2. EVIDENCE SUBMITTED UNDER NOA # 23-1030.04

A. DRAWINGS

1. None.

B. TESTS

1. None.

C. CALCULATIONS

1. None.

D. QUALITY ASSURANCE

1. Miami-Dade Department of Regulatory and Economic Resources (RER)

E. MATERIAL CERTIFICATIONS

1. None.

F. STATEMENTS

1. Statement letter of code conformance to the **FBC 8th Edition (2023)** and of no financial interest, dated October 16, 2023, issued by manufacturer, signed and sealed by Robert V. Nangia, P.E.

G. OTHERS

1. Notice of Acceptance No. **21-0526.10**, issued to Greenheck Fan Corporation for their Model EVH-501D Aluminum Louver, approved on 08/12/21 and expiring on 08/06/25.

Carlos M. Utrera, P.E.
Product Control Examiner
NOA No. 25-0317.02
Expiration Date: August 6, 2030
Approval Date: May 15, 2025

NOTICE OF ACCEPTANCE: EVIDENCE SUBMITTED

3. EVIDENCE SUBMITTED UNDER NOA # 23-1030.04 AND NEW

A. DRAWINGS

1. Drawing No. **EVH-501D**, titled "EVH-501D", sheets 1 through 14 of 14, dated 04/01/2015, prepared by the Greenheck Fan Corporation, signed and sealed by Robert V. Nangia, P.E., on 04/04/2025.

B. TESTS

1. Test reports on: 1) Uniform Static Air Pressure Test, Loading per FBC, TAS 202-94
2) Large Missile Impact Test per FBC, TAS 201-94
3) Cyclic Wind Pressure Loading per FBC, TAS 203-94
along with marked-up drawings and installation diagram of Model EVH-501D aluminum vertical louvers, prepared by Quast Consulting & Testing, Inc, Report No. **QCT24-7460.01,** dated 01/13/2025, signed and sealed by Arlen Fisher, P.E.

C. CALCULATIONS

1. Structural load calculations prepared by Greenheck Fan Corporation, dated 02/03/2025, signed and sealed by Robert V. Nangia, P.E.

D. QUALITY ASSURANCE

1. Miami-Dade Department of Regulatory and Economic Resources (RER)

E. MATERIAL CERTIFICATIONS

1. None.

F. STATEMENTS

1. Statement letter of code conformance to the 8th edition (2023) of the FBC and of no financial interest, dated 02/08/2025, issued by Greenheck Fan Corporation, signed and sealed by Robert V. Nangia, P.E.

2. Statement letter of code conformance to the 8th edition (2023) of the FBC and of no financial interest, dated 10/16/2023, issued by Greenheck Fan Corporation, signed and sealed by Robert V. Nangia, P.E.

Carlos M. Utrera, P.E.
Product Control Examiner
NOA No. 25-0317.02
Expiration Date: August 6, 2030
Approval Date: May 15, 2025

PRODUCT REVISED
as complying with the Florida Building Code
NOA-No. 25-0317.02
Expiration Date 08/06/2030
By
Miami-Dade Product Control

MODEL NAME EQUIVALENTS		
BRAND	GREENHECK	AIRDLITE
MODEL	EVH-501D	SCV501MD
DESIGN PRESSURE	+/- 130 PSF	

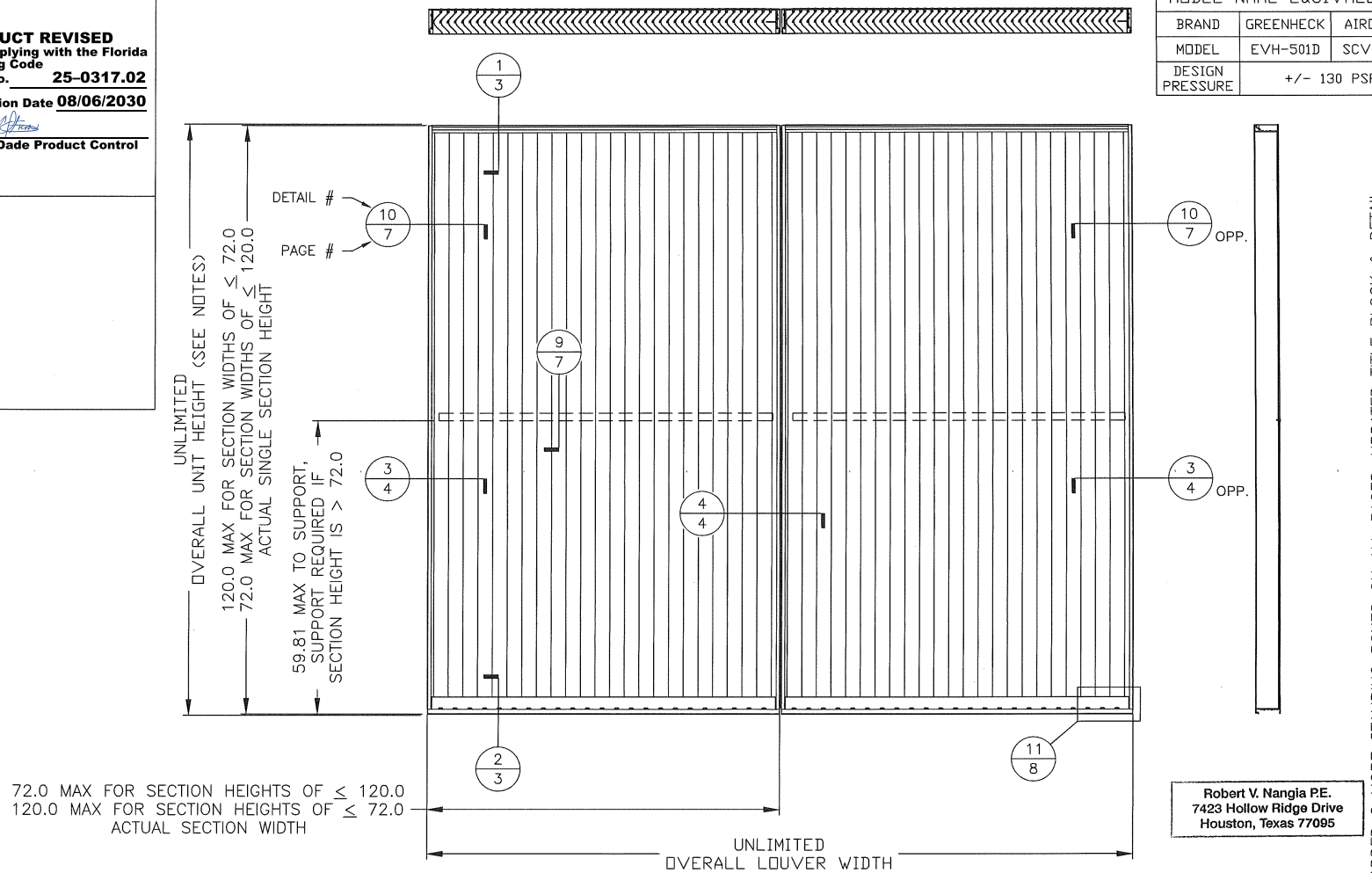

Robert V. Nangia P.E.
7423 Hollow Ridge Drive
Houston, Texas 77095

NOTES:

- SINGLE-WIDE BY MULTI-HIGH ASSEMBLIES ARE PERMITTED AS LONG AS EACH SECTION'S HEIGHT/WIDTH ARE WITHIN THE ALLOWABLE MAXIMUMS, AND HEAD/SILL MOUNTING IS FOLLOWED AS SHOWN HEREIN.
- MULTI-WIDE BY SINGLE-HIGH ASSEMBLIES ARE PERMITTED AS LONG AS EACH SECTION'S HEIGHT/WIDTH ARE WITHIN THE ALLOWABLE MAXIMUMS, AND HEAD/SILL MOUNTING IS FOLLOWED AS SHOWN HEREIN. MULLION SPACING IS 72.25 MAX ON CENTER.
- MULTI-WIDE BY MULTI-HIGH ASSEMBLIES ARE PERMITTED AS LONG AS THE ABOVE TWO NOTES ARE FOLLOWED, AND THERE IS SUITABLE LOAD-BEARING STRUCTURE (BY OTHERS) AT EACH SECTION'S HEAD/SILL LOCATION AND HEAD/SILL MOUNTING IS FOLLOWED AS SHOWN HEREIN.

REV 01: 2/3/25, ADDED 2 MORE STAMPING BOXES ON ALL PAGES, UPDATED TITLE BLOCK & DETAIL TITLES ON ALL PAGES AS NEEDED, UPDATED DETAIL CALLOUT PAGE NUMBERS AS NEEDED ON ALL PAGES, ADDED PRESSURE BOX, ADDED MODEL NAME EQUIVALENTS

1

DATE 4/1/15
DRAWN BY BCB
SCALE
SHEET NO. 1 OF 14
CAD DRAWING NO. EVH-501D

GREENHECK
P.O.BOX 410 SCHOFIELD, WISCONSIN 54476-0410

TITLE
EVH-501D
CHANNEL FRAME
ELEVATION

STRUCTURAL ONLY
ROBERT V. NANGIA
LICENSE
No. 69555
STATE OF FLORIDA
PROFESSIONAL ENGINEER

APR 04 2025

PRODUCT REVISED
as complying with the Florida Building Code
NOA-No. 25-0317.02
Expiration Date 08/06/2030
By
Miami-Dade Product Control

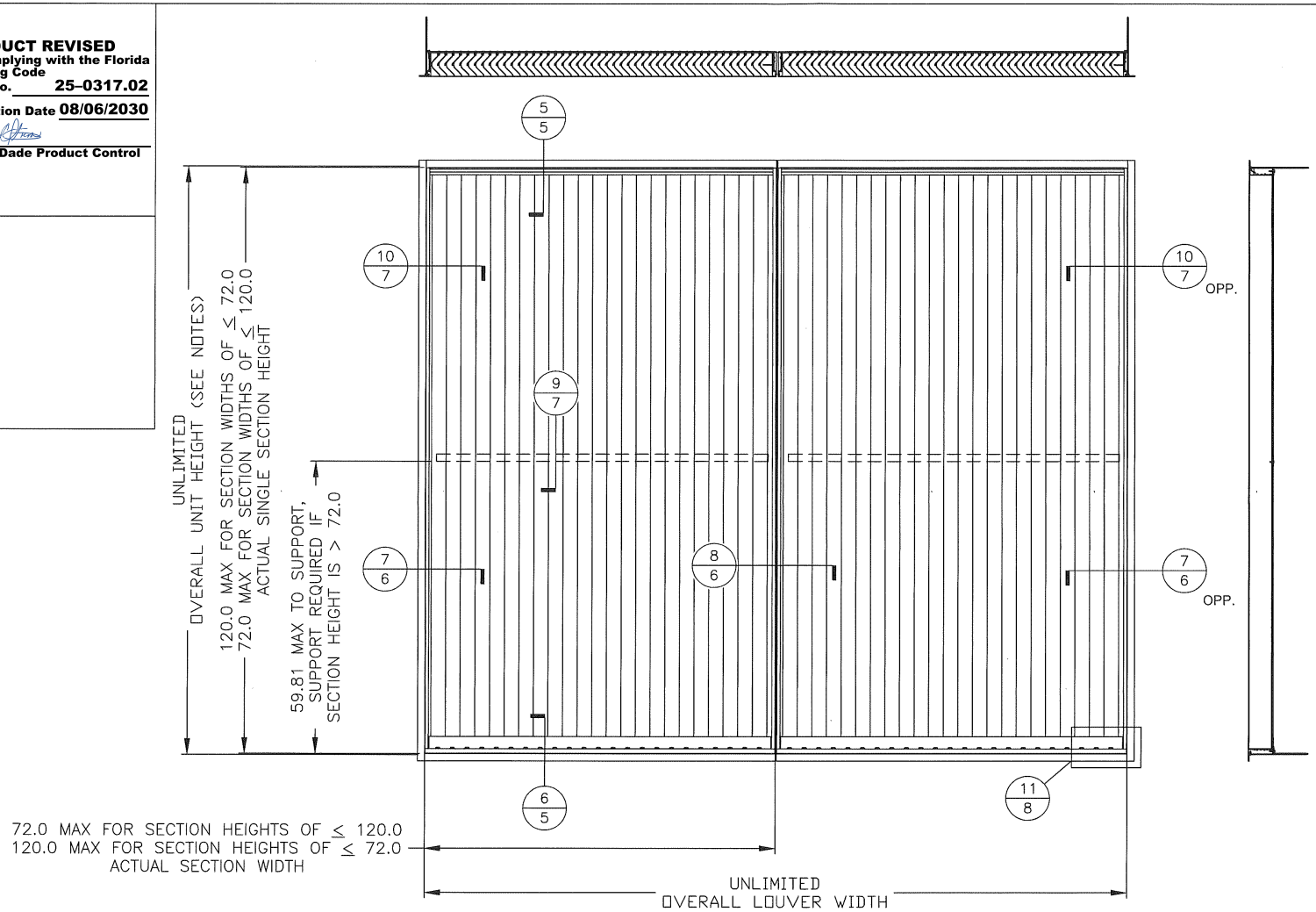

NOTES:

- SINGLE-WIDE BY MULTI-HIGH ASSEMBLIES ARE PERMITTED AS LONG AS EACH SECTION'S HEIGHT/WIDTH ARE WITHIN THE ALLOWABLE MAXIMUMS, AND HEAD/SILL MOUNTING IS FOLLOWED AS SHOWN HEREIN.
- MULTI-WIDE BY SINGLE-HIGH ASSEMBLIES ARE PERMITTED AS LONG AS EACH SECTION'S HEIGHT/WIDTH ARE WITHIN THE ALLOWABLE MAXIMUMS, AND HEAD/SILL MOUNTING IS FOLLOWED AS SHOWN HEREIN. MULLION SPACING IS 72.25 MAX ON CENTER.
- MULTI-WIDE BY MULTI-HIGH ASSEMBLIES ARE PERMITTED AS LONG AS THE ABOVE TWO NOTES ARE FOLLOWED, AND THERE IS SUITABLE LOAD-BEARING STRUCTURE (BY OTHERS) AT EACH SECTION'S HEAD/SILL LOCATION AND HEAD/SILL MOUNTING IS FOLLOWED AS SHOWN HEREIN.

REV 01: 2/3/25, ADDED NEW SHEET FOR SLEEVE FRAME ELEVATION.

DRAWN BY BCB	DATE 4/1/15
SCALE	
SHEET NO. 2 OF 14	
CAD DRAWING NO. EVH-501D	

GREENHECK
P.O.BOX 410 SCHOFIELD, WISCONSIN 54476-0410

TITLE
EVH-501D
SLEEVE FRAME
ELEVATION

ROBERT V. NANGIA
LICENSE
No. 69555
STATE OF FLORIDA
PROFESSIONAL ENGINEER

04 2025

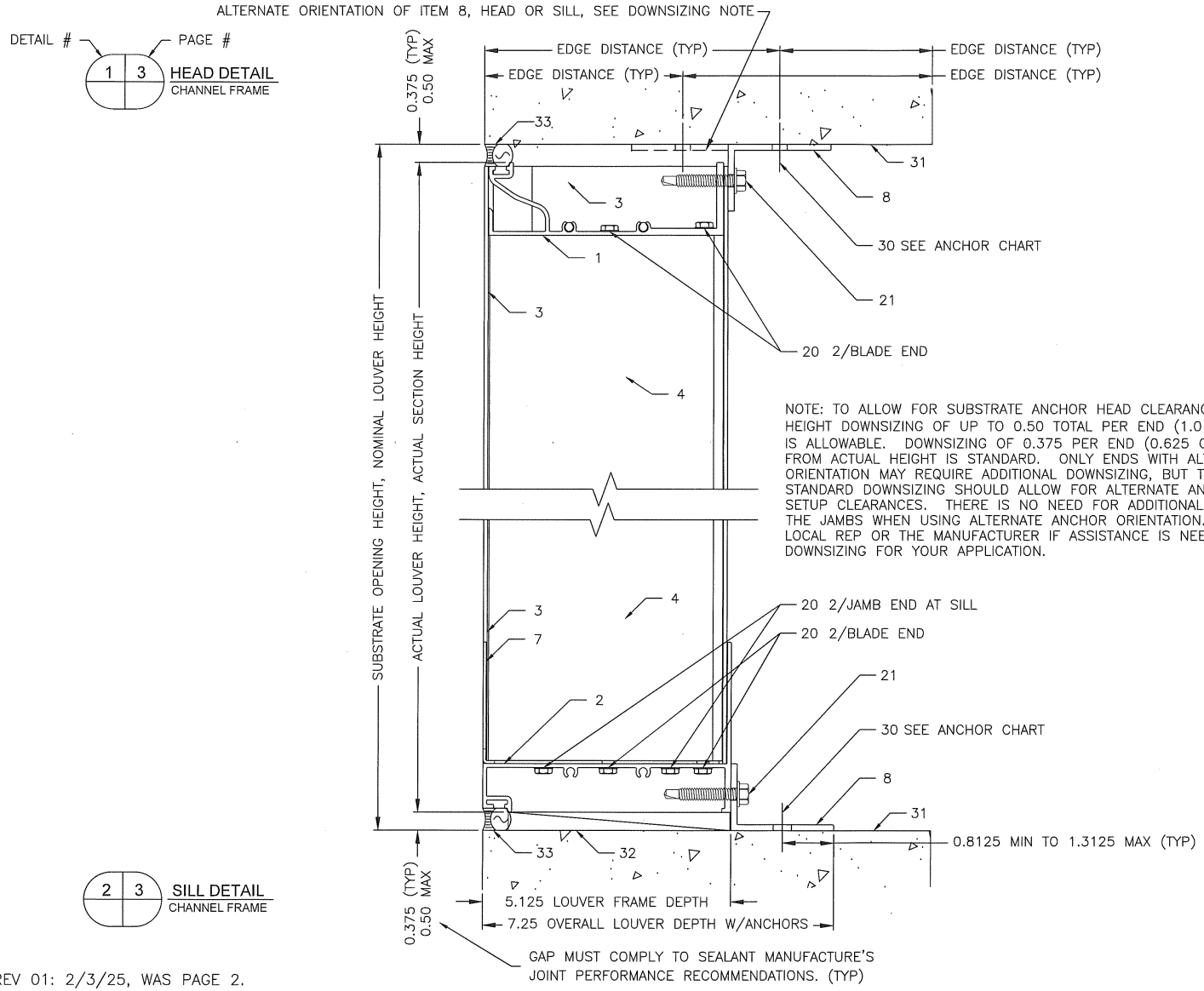

NOTE: TO ALLOW FOR SUBSTRATE ANCHOR HEAD CLEARANCE, LOUVER HEIGHT DOWNSIZING OF UP TO 0.50 TOTAL PER END (1.0 OVERALL TOTAL) IS ALLOWABLE. DOWNSIZING OF 0.375 PER END (0.625 OVERALL TOTAL) FROM ACTUAL HEIGHT IS STANDARD. ONLY ENDS WITH ALTERNATE ANCHOR ORIENTATION MAY REQUIRE ADDITIONAL DOWNSIZING, BUT THE 0.375 STANDARD DOWNSIZING SHOULD ALLOW FOR ALTERNATE ANCHOR ORIENTATION SETUP CLEARANCES. THERE IS NO NEED FOR ADDITIONAL DOWNSIZING AT THE JAMBS WHEN USING ALTERNATE ANCHOR ORIENTATION. CONSULT YOUR LOCAL REP OR THE MANUFACTURER IF ASSISTANCE IS NEEDED FOR PROPER DOWNSIZING FOR YOUR APPLICATION.

PRODUCT REVISED
as complying with the Florida Building Code
NOA-No. 25-0317.02
Expiration Date 08/06/2030
By
Miami-Dade Product Control

DRAWN BY	BCB
DATE	4/1/15
SCALE	
SHEET NO.	3 OF 14
CAD DRAWING NO.	EVH-501D
TITLE	EVH-501D CHANNEL FRAME DETAILS

GREENHECK
P.O.BOX 410 SCHOFIELD, WISCONSIN 54476-0410

ROBERT V. NANGIA
LICENSE
No. 69555
STATE OF FLORIDA
PROFESSIONAL ENGINEER

APR 04 2025

REV 01: 2/3/25, WAS PAGE 2.

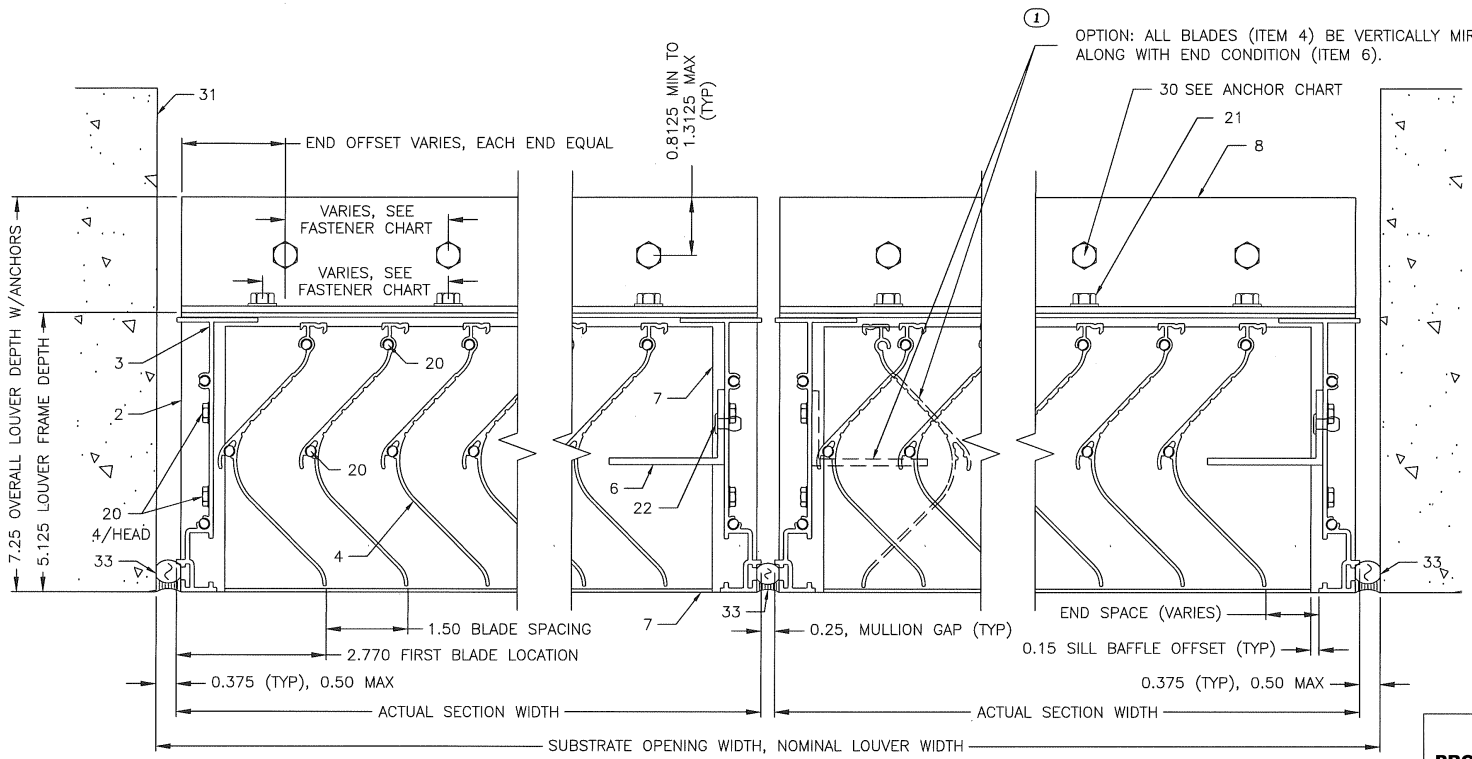

3 | 4 JAMB DETAIL CHANNEL FRAME

4 | 4 MULLION DETAIL CHANNEL FRAME

3 | 4 OPP JAMB DETAIL (OPP) CHANNEL FRAME

PRODUCT REVISED
as complying with the Florida Building Code
NOA-No. 25-0317.02
Expiration Date 08/06/2030
By
Miami-Dade Product Control

DRAWN BY BCB | DATE 4/1/15 | SCALE | SHEET NO. 4 OF 14 | CAD DRAWING NO. EVH-501D

GREENECK
P.O.BOX 410 SCHOFIELD, WISCONSIN 54476-0410

TITLE EVH-501D CHANNEL FRAME DETAILS

ROBERT V. NANGIA LICENSE No. 69555 STATE OF FLORIDA PROFESSIONAL ENGINEER

APR 04 2025

REV 01: 2/3/25, WAS PAGE 3, & ADDED OPTIONAL BLADE ORIENTATION.

5 | 5 HEAD DETAIL
SLEEVE FRAME

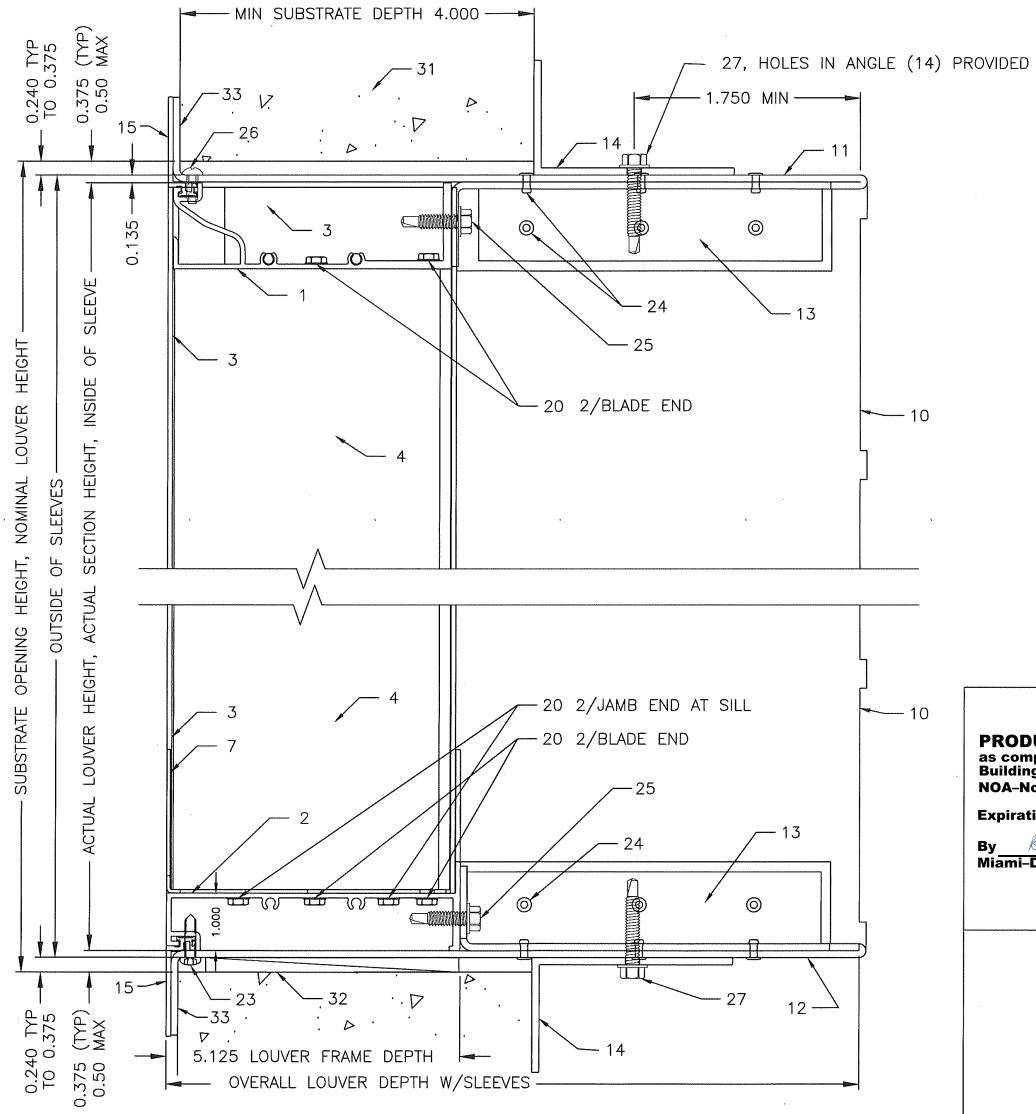

6 | 5 SILL DETAIL
SLEEVE FRAME

REV 01: 2/3/25, ADDED NEW SHEET FOR SLEEVE FRAME DETAIL.

PRODUCT REVISED
as complying with the Florida Building Code
NOA-No. 25-0317.02
Expiration Date 08/06/2030
By
Miami-Dade Product Control

GREENHECK
P.O.BOX 410 SCHOFIELD, WISCONSIN 54476-0410

TITLE
EVH-501D
SLEEVE FRAME
DETAILS

DRAWN BY BCB
DATE 4/1/15
SCALE
SHEET NO. 5 OF 14
CAD DRAWING NO. EVH-501D

ROBERT V. NANGIA
LICENSE
No. 69555
STATE OF FLORIDA
PROFESSIONAL ENGINEER

APR 04 2025

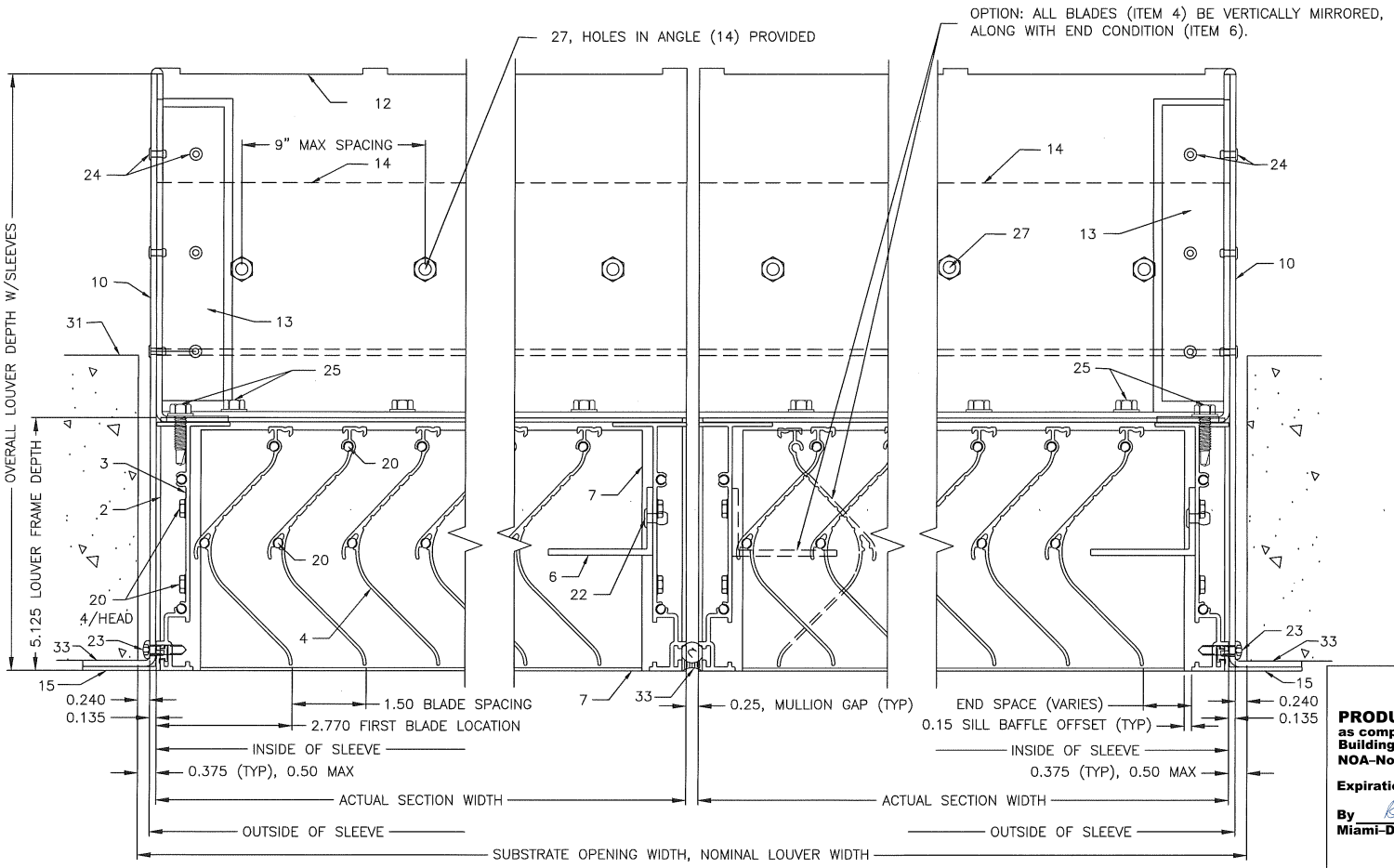

7 | 6 JAMB DETAIL SLEEVE FRAME

8 | 6 MULLION DETAIL SLEEVE FRAME

7 | 6 OPP JAMB DETAIL (OPP) SLEEVE FRAME

PRODUCT REVISED
as complying with the Florida Building Code
NOA-No. 25-0317.02
Expiration Date 08/06/2030
By
Miami-Dade Product Control

DRAWN BY	BCB
DATE	4/1/15
SCALE	
SHEET NO.	6 OF 14
CAD DRAWING NO.	EVH-501D
TITLE	EVH-501D SLEEVE FRAME DETAILS

GREENHECK
P.O.BOX 410 SCHOFIELD, WISCONSIN 54476-0410

ROBERT V. NANGIA LICENSE No. 69555 STATE OF FLORIDA PROFESSIONAL ENGINEER

APR 04 2025

REV 01: 2/3/25, ADDED NEW SHEET FOR SLEEVE FRAME DETAIL.

THIS PAGE DEPICTS DETAILS OF THE SUPPORT STRAP ONLY, SEE PAGES 3 THROUGH 6 FOR OTHER ITEMS.

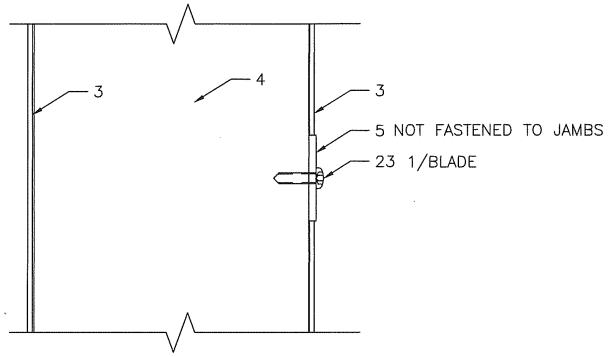

9 | 7 BLADE STRAP DETAIL
WHEN SECTION HEIGHT > 72.0"

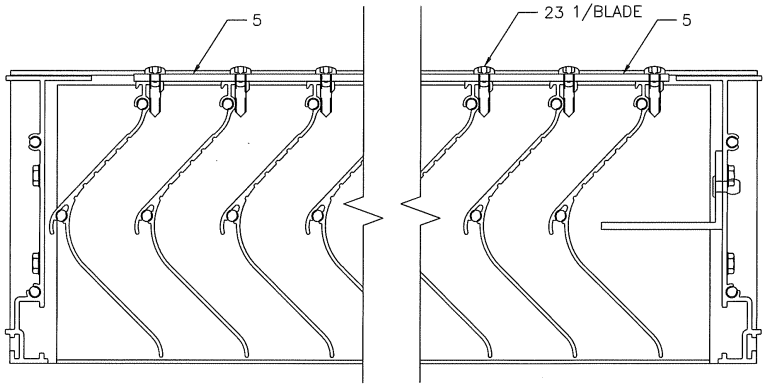

10 | 7 BLADE STRAP AT JAMB DETAIL
WHEN SECTION HEIGHT > 72.0"

10 | 7 OPP BLADE STRAP AT JAMB DETAIL (OPP)
WHEN SECTION HEIGHT > 72.0"

REV 01: 2/3/25, WAS PAGE 4.

DRAWN BY BCB
DATE 4/1/15
SCALE
SHEET NO. 7 OF 14
CAD DRAWING NO. EVH-501D

GREENHECK
P.O.BOX 410 SCHOFIELD, WISCONSIN 54476-0410

TITLE
EVH-501D
CHANNEL & SLEEVE FRAME
SUPPORT DETAILS

PRODUCT REVISED
as complying with the Florida Building Code
NOA-No. 25-0317.02
Expiration Date 08/06/2030
By
Miami-Dade Product Control

ROBERT V. NANGIA
LICENSE
No. 69555
STATE OF FLORIDA
PROFESSIONAL ENGINEER
MAY 4 2025

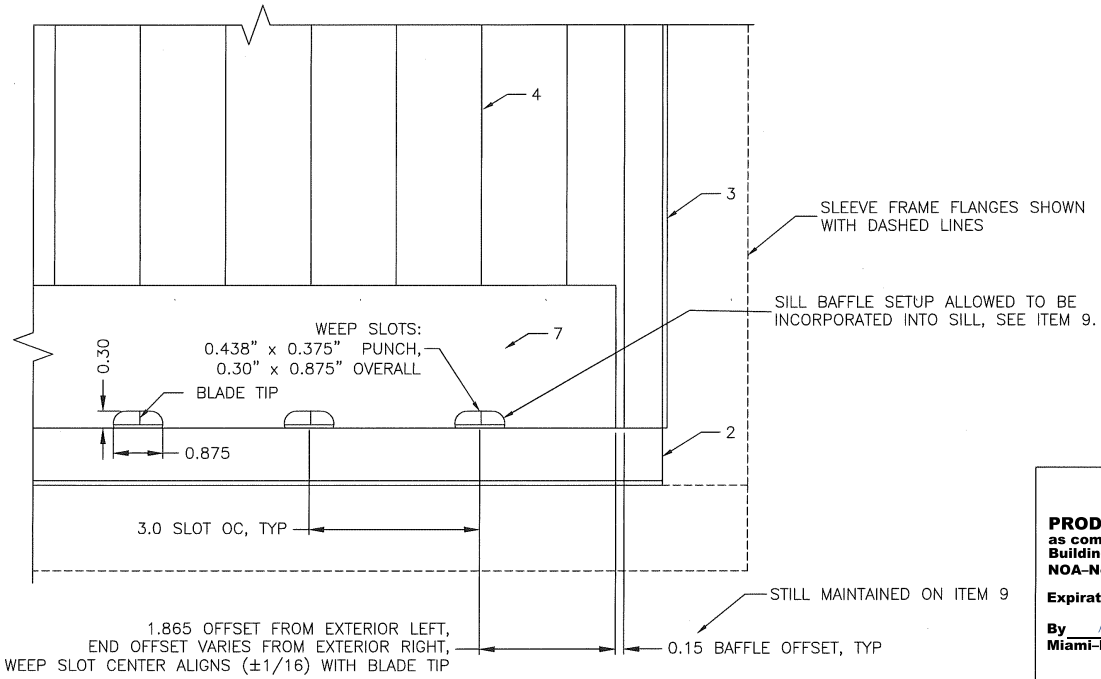

11 | 8 BAFFLE/WEEP DETAIL

PRODUCT REVISED
as complying with the Florida Building Code
NOA-No. 25-0317.02
Expiration Date 08/06/2030
By
Miami-Dade Product Control

DRAWN BY BCB | DATE 4/1/15
SCALE
SHEET NO. 8 OF 14
CAD DRAWING NO. EVH-501D

GREENHECK
P.O.BOX 410 SCHOFIELD, WISCONSIN 54476-0410

TITLE
EVH-501D
CHANNEL & SLEEVE FRAME
SILL BAFFLE DETAILS

ROBERT V. NANGIA
LICENSE
No. 69555
STATE OF FLORIDA
PROFESSIONAL ENGINEER
APR 2025

REV 01: 2/3/25, WAS PAGE 5, & ADDED SLEEVE FRAME TO DETAIL.

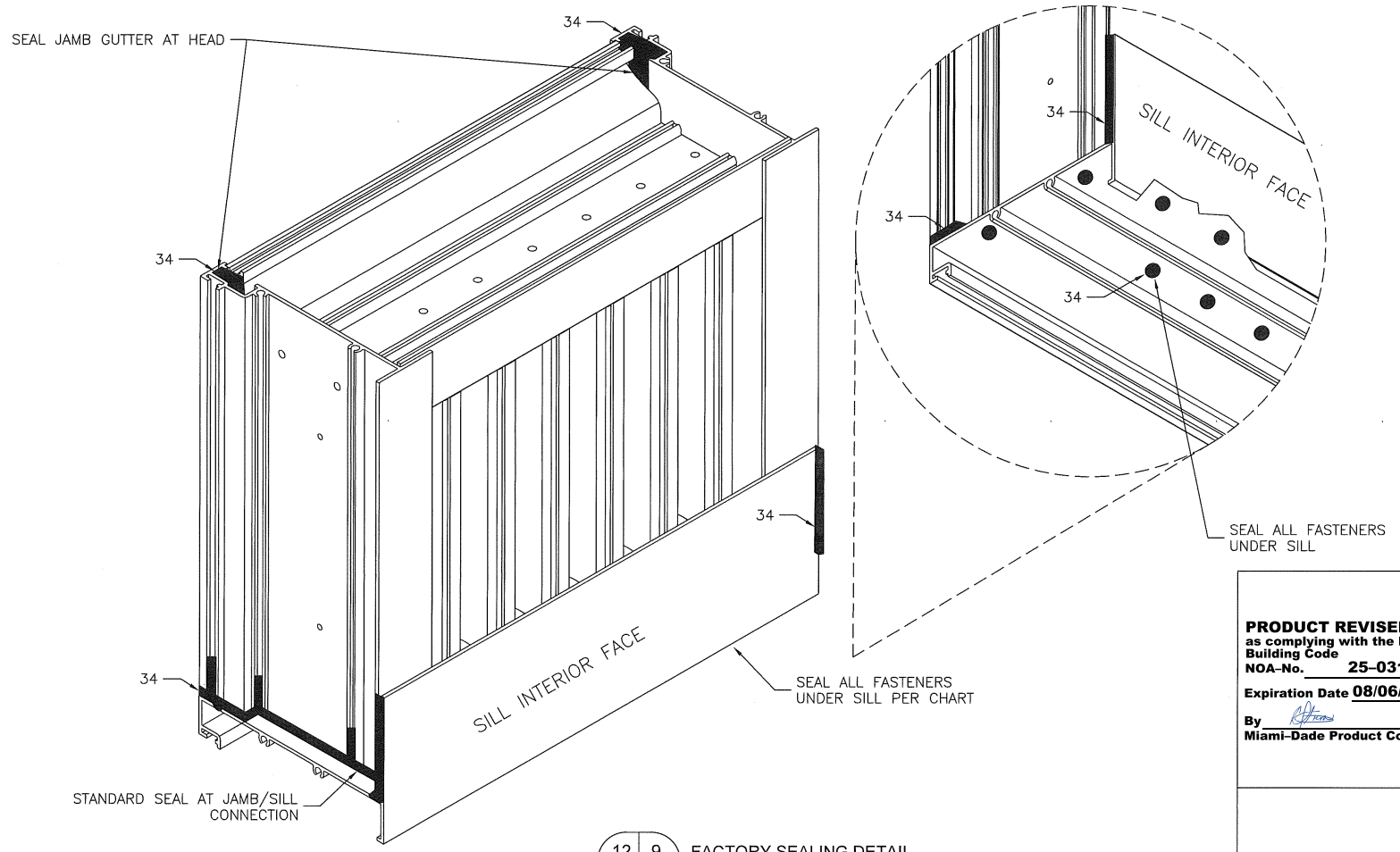

12 | 9 FACTORY SEALING DETAIL

PRODUCT REVISED
as complying with the Florida Building Code
NOA-No. 25-0317.02
Expiration Date 08/06/2030
By
Miami-Dade Product Control

GREENHECK
P.O.BOX 410 SCHOFIELD, WISCONSIN 54476-0410

DRAWN BY	BCB
DATE	4/1/15
SCALE	
SHEET NO.	9 OF 14
CAD DRAWING NO.	EVH-501D
TITLE	EVH-501D CHANNEL & SLEEVE FRAME SEALING DETAILS

ROBERT V. NANGIA
LICENSE
No. 69555
STATE OF FLORIDA
PROFESSIONAL ENGINEER
APR 1 2025

REV 01: 2/3/25, WAS PAGE 6.

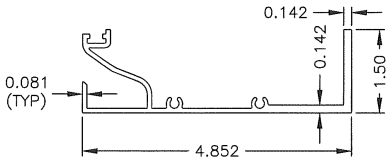

1 HEAD
6005-T5 ALUMINUM

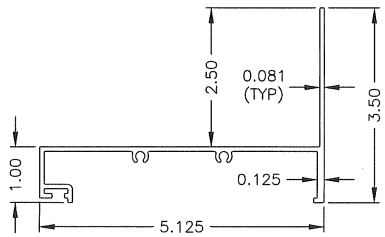

2 SILL
6005-T5 ALUMINUM

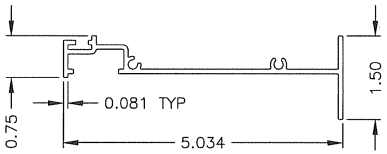

3 JAMB
6063-T5 ALUMINUM

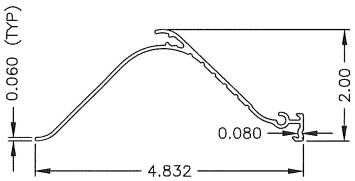

4 BLADE
6063-T5 ALUMINUM

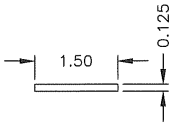

5 BLADE SUPPORT STRAP
6063-T5 ALUMINUM

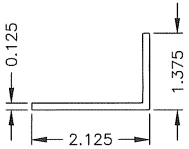

ONLY USED IF END SPACE IS > 0.681"

6A JAMB BLANKOFF ANGLE
6063-T5 ALUMINUM

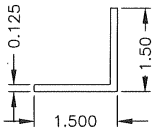

ONLY USED IF ENDSPACE IS ≤ 0.681"

6B JAMB BLANKOFF ANGLE
6063-T5 ALUMINUM

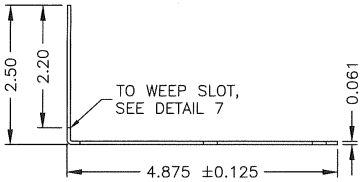

7 SILL BAFFLE
5052-H32 ALUMINUM SHEET OR 6063-T5 EXTRUSION

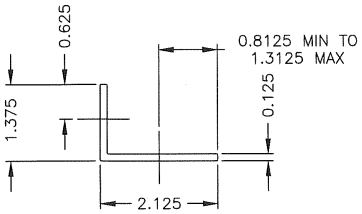

8 CONTINUOUS MOUNTING ANGLE
6061-T6 ALUMINUM

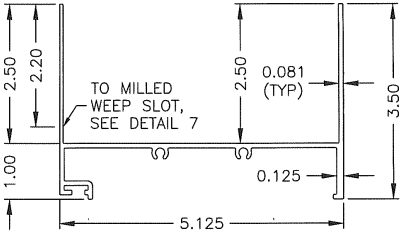

9 COMBINATION SILL WITH BAFFLE
6005-T5 ALUMINUM

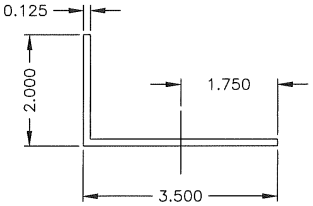

14 CONDITION CAPTURE ANGLE
6005-T5 ALUMINUM

1

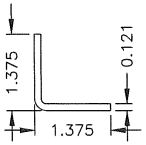

13 SLEEVE CORNER ANGLE
5052-H32 ALUMINUM SHEET

1

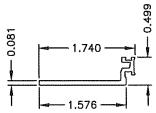

15 FLANGE
6063-T5 ALUMINUM

1

PRODUCT REVISED
as complying with the Florida Building Code
NOA-No. 25-0317.02
Expiration Date 08/06/2030
By
Miami-Dade Product Control

DRAWN BY BCB	DATE 4/1/15
SCALE	
SHEET NO. 10 OF 14	CAD DRAWING NO. EVH-501D

GREENHECK
P.O.BOX 410 SCHOFIELD, WISCONSIN 54476-0410

TITLE
EVH-501D
CHANNEL & SLEEVE FRAME
PART PROFILES

ROBERT V. NANGIA
LICENSE
No. 69555
STATE OF FLORIDA
PROFESSIONAL ENGINEER

REV 01: 2/3/25, WAS PAGE 7, & ADDED ITEMS 13, 14 & 15.

0 4 2025

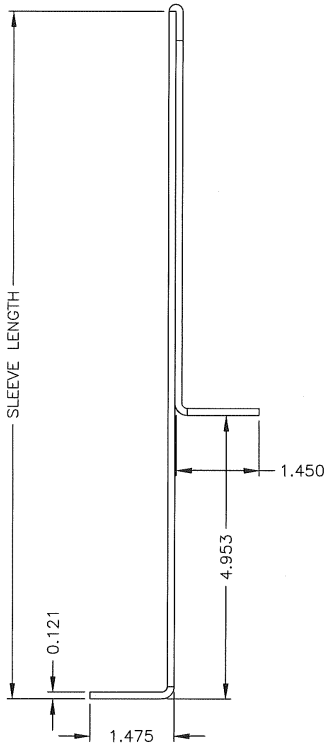

(10) JAMB SLEEVE
5052-H32 ALUMINUM SHEET

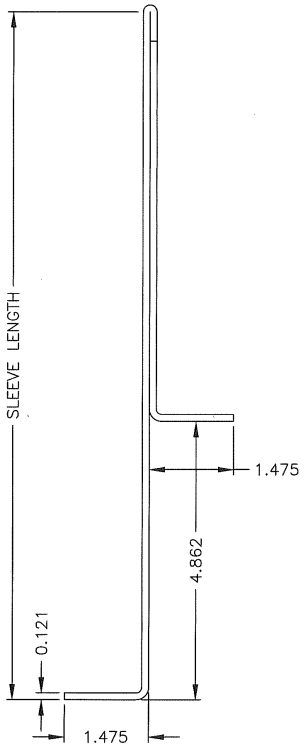

(11) HEAD SLEEVE
5052-H32 ALUMINUM SHEET

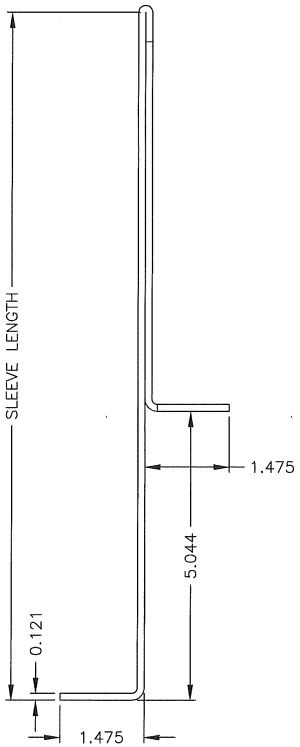

(12) SILL SLEEVE
5052-H32 ALUMINUM SHEET

PRODUCT REVISED
as complying with the Florida Building Code
NOA-No. 25-0317.02
Expiration Date 08/06/2030
By
Miami-Dade Product Control

GREENECK
P.O.BOX 410 SCHOFIELD, WISCONSIN 54476-0410

DRAWN BY	BCB
DATE	4/1/15
SCALE	
SHEET NO.	11 OF 14
CAD DRAWING NO.	EVH-501D
TITLE	EVH-501D SLEEVE FRAME PART PROFILES

ROBERT V. NANGIA
LICENSE
No. 69555
STATE OF FLORIDA
PROFESSIONAL ENGINEER
APR 4 2025

REV 01: 2/3/25, ADDED NEW SHEET FOR ITEMS 10 THRU 12.

ITEM	DESCRIPTION	MATERIAL	INTERNAL ID#	NOTES	
1	HEAD	6005-T5 ALUM	126069		
2	SILL	6005-T5 ALUM	126070		
3	JAMB	6063-T5 ALUM	126015		
4	BLADE	6063-T5 ALUM	126016	1.5" CENTERS/SPACING	
5	BLADE SUPPORT STRAP	6063-T5 ALUM	130311	REQUIRED IF SECTION HEIGHT IS > 72.0", NOT FASTENED TO JAMBS	
6	JAMB BLANKOFF ANGLE	6063-T5 ALUM	125151 OR 125967	STANDARD LAYOUT: RIGHT JAMB ONLY (EXTERIOR VIEW), MIRRORED LAYOUT: ON LEFT JAMB ONLY (EXTERIOR VIEW)	1
7	SILL BAFFLE	5052-H32 ALUM	NA	EXTRUDED ANGLE ALLOWED	
8	CONTINUOUS MOUNTING ANGLE	6061-T6 ALUM	125967	AT HEAD AND SILL ONLY	
9	COMBINATION SILL WITH BAFFLE	6005-T5 ALUM	NA	ALLOWED TO REPLACE ITEMS 2 AND 7	
10	JAMB SLEEVE	5052-H32 ALUM	NA	0, 1, OR 2 PER UNIT ONLY ON CONDITION SIDES WHEN SLEEVED	1
11	HEAD SLEEVE	5052-H32 ALUM	NA	1 EVERY UNIT WHEN SLEEVED	1
12	SILL SLEEVE	5052-H32 ALUM	NA	1 EVERY UNIT WHEN SLEEVED	1
13	SLEEVE CORNER ANGLE	5052-H32 ALUM	NA	ONLY WHERE SLEEVES COME TOGETHER AT CORNERS	1
14	CONDITION CAPTURE ANGLE	6005-T5 ALUM	126214	AT HEAD AND SILL ONLY WHEN SLEEVED	1
15	FLANGE	6063-T5 ALUM	125147		1
--	--	--	--	--	
20	#10-16 x 2.25" SCREW	300 SERIES SS	416351	AT FRAME CORNERS AND BLADE ENDS	
21	1/4-20 SCREW, DEWALT/ECLO BI-FLEX, PROVIDED BY LOUVER MANUFACTURER	MULTI SEE NOTES	417780	6.0" MAX CENTER ON CONTINUOUS ANGLE TO UNI, 300 SS HEAD & SHANK W/COATED STEEL TIP	1
22	3/16" ø RIVET	300 SERIES SS	416588	ONLY ON ITEM 6 AT 8" MAX CENTERS	1
23	#10-16 x 0.75" SCREW	300 SERIES SS	416108	ONE PER BLADE ON ITEM 5, 12.0" MAX SPACING ON ITEMS 11 AND 12	1
24	1/8" ø RIVET	ALUMINUM	415706	6 PER SLEEVE CORNER ANGLE	1
25	1/4-20 SCREW, DEWALT/ECLO BI-FLEX, INSTALLED BY LOUVER MANUFACTURER	MULTI SEE NOTES	417781	6.0" MAX CENTERS FROM SLEEVE TO UNIT, 300 SS HEAD & SHANK W/COATED STEEL TIP	1
26	#10-16 x 0.50" SCREW	300 SERIES SS	417461	ON ITEM 11 12.0" MAX SPACING	1
27	1/4-20 SCREW, DEWALT/ECLO BI-FLEX, PROVIDED BY LOUVER MANUFACTURER	MULTI SEE NOTES	417780	9.0" MAX CENTERS FROM CAPTURE ANGLE TO SLEEVE, 300 SS HEAD & SHANK W/COATED STEEL TIP	
--	--	--	--	--	
30	SUBSTRATE FASTENER, SEE ANCHOR CHART	300 SS	NA	BY OTHERS, MINIMUM OF ONE TYPE REQUIRED, SEE ANCHOR CHART FOR ADDITIONAL DETAILS	1
31	SUBSTRATE, GROUT FILLED CMU	GROUT FILLED CMU	NA	BY OTHERS, MINIMUM OF ONE TYPE REQUIRED, SEE ANCHOR CHART FOR ADDITIONAL DETAILS	
	SUBSTRATE, CONCRETE	CONCRETE			
	SUBSTRATE, STEEL STUD	STEEL			
	SUBSTRATE, STRUCTURAL STEEL	STEEL			
	SUBSTRATE, WOOD	WOOD			
	SUBSTRATE, ALUMINUM	ALUMINUM			
32	SHIM, NON-COMPRESSIBLE	VARIOUS	-	BY OTHERS, OPTIONAL, AS NEEDED	
33	SEALANT & (BACKER ROD AS NEEDED)	VARIOUS	-	BY OTHERS, OPTIONAL, PERIMETER SEALANT REQUIRED FOR AMCA 550 COMPLIANCE	1
34	SEALANT, FACTORY APPLIED	VARIOUS	NA	FACTORY APPLIED	

REV 01: 2/3/25, WAS PAGE 8, GENERAL NOTES NOW ON NEW PAGE 13, ADDED ITEMS 10-15 & 24-27, REPLACED ITEM 21, CHANGED NOTE ON ITEMS 6 & 23 & 33, & CHANGED DESCRIPTION ON ITEM 33.

PRODUCT REVISED
as complying with the Florida Building Code
NOA-No. 25-0317.02
Expiration Date 08/06/2030
By
Miami-Dade Product Control

DRAWN BY BCB
DATE 4/1/15
SCALE
SHEET NO. 12 OF 14
CAD DRAWING NO. EVH-501D

GREENHECK
P.O.BOX 410 SCHOFIELD, WISCONSIN 54476-0410

TITLE
EVH-501D
CHANNEL & SLEEVE FRAME
ITEM DESCRIPTIONS

ROBERT V. NANGIA
LICENSE
No. 69555
STATE OF FLORIDA
PROFESSIONAL ENGINEER

APR 04 2025

GENERAL NOTES:

1. IT SHALL BE THE RESPONSIBILITY OF THE PERMIT HOLDER TO VERIFY THE STRUCTURAL INTEGRITY OF THE EXISTING STRUCTURE TO SUPPORT THE LOADS IMPOSED BY THE LOUVER ASSEMBLY. THE LOUVER MANUFACTURER DOES NOT DETERMINE THE STRUCTURAL INTEGRITY OF THE SUBSTRATE STRUCTURE.
2. THIS LOUVER HAS BEEN DESIGNED AND TESTED IN ACCORDANCE WITH MIAMI-DADE COUNTY PROTOCOLS [AND QUALIFIED IN ACCORDANCE WITH THE CURRENT FLORIDA BUILDING CODE (FBC) AND TEST PROTOCOLS/STANDARDS]:
   - -TAS-201 (LARGE MISSILE IMPACT TEST, 80 FT/S IMPACT SPEED) (1)
   - -TAS-202 (UNIFORM STATIC WIND PRESSURE TEST)
   - -TAS-203 (UNIFORM CYCLIC WIND PRESSURE TEST)
   - -AMCA STANDARD 550 (HIGH VELOCITY WIND DRIVEN RAIN TEST, WITH BLADES FULLY OPEN) (1)
3. THIS LOUVER HAS BEEN DESIGNED, TESTED, AND APPROVED TO WITHSTAND DESIGN PRESSURES OF UP TO AND INCLUDING +/-130 PSF. ALLOWABLE STRESS DESIGN (ASD). (1)
4. DUE TO PASSING AMCA STANDARD 550 WITH BLADES FULLY OPEN, THE LOUVER IS DESIGNED TO PREVENT WIND DRIVEN RAIN FROM PENETRATING THE SPACE BEHIND THE LOUVER. AS SUCH, THE LOUVER MAY BE INSTALLED IN A LOCATION WHERE THE SPACE/ROOM BEHIND THE LOUVER IS NOT DESIGNED TO DRAIN WATER PENETRATING INTO THE ROOM OR THE ROOM WILL HOUSE NON-WATER RESISTANT/PROOF EQUIPMENT, COMPONENTS, OR SUPPLIES. (1)
5. THE MAXIMUM SINGLE SECTION SIZE IS 120 WIDE BY 72 HIGH OR 72 WIDE BY 120 HIGH. THE MAXIMUM OVERALL/ASSEMBLED SIZE IS UNLIMITED WIDE BY USE OF MULTIPLE SECTIONS. SECTIONS/ASSEMBLIES MAY BE STACKED VERTICALLY PROVIDED THERE IS SUITABLE STRUCTURAL SUPPORT (DESIGNED AND INSTALLED BY OTHERS) TO SUPPORT ALL LOADS TRANSFERRED FROM THE LOUVER HEAD AND/OR SILL MOUNTING ANGLES TO THE SUBSTRATE.
6. GENERAL LOUVER CONSTRUCTION: HEAD, SILL, JAMBS, AND BLADES ARE EXTRUDED ALUMINUM. BLADE SPACING IS 1.5 INCHES. BLADES ARE SECURED TO THE HEAD/SILL WITH (2) SCREWS PER BLADE END. HEAD IS SECURED TO THE JAMB WITH (2) SCREWS PER HEAD END. SILL IS SECURED TO THE JAMB WITH (2) SCREWS PER SILL END. BLADE SUPPORT STRAP IS SECURED TO BLADES BY (1) SCREW PER BLADE. BLADE SUPPORT STRAP IS REQUIRED IF ACTUAL LOUVER HEIGHT IS > 72 INCHES.
7. INSTALLER TO PROVIDE SEPARATION OF DISSIMILAR MATERIALS AS REQUIRED PER THE CURRENT FL BLDG CODE. (1)
8. ALL ALUMINUM, STAINLESS STEEL (SS), AND PLATED/COATED STEEL PARTS PROVIDED BY MANUFACTURER ARE INHERENTLY CORROSION RESISTANT OR HAVE A CORROSION RESISTANT COATING.
9. STEEL/STAINLESS STEEL/ALUMINUM PARTS MAY BE MADE OUT OF ALTERNATE ALLOY THAT HAS EQUAL OR GREATER YIELD STRENGTH. PART DIMENSIONS ARE MINIMUMS UNLESS DEFINED OTHERWISE.
10. THE INTERNAL ID# SHOWN ON PAGE 12 IS FOR FACTORY USE AND TRACKING PURPOSES ONLY AND MAY BE UPDATED AT ANY TIME. ANY UPDATES WILL NOT ALTER THE ITEM AS DESCRIBED HEREIN.
11. BLADE ORIENTATION SHOWN HEREIN IS CONSIDERED STANDARD. BLADE ORIENTATION AND INTERNAL PARTS CAN BE VERTICALLY MIRRORED AND STILL MAINTAIN ALL SHOWN CERTIFICATIONS. (1)
12. ALL DIMENSION UNITS ARE IMPERIAL UNLESS OTHERWISE NOTED. (1)
13. SUBSTRATE FOR SLEEVE FRAME SETUP: ANY SUBSTRATE IS ALLOWED THAT CAN WITHSTAND LOADS IMPOSED BY THE LOUVER ASSEMBLY (DETERMINED BY OTHERS). ALLOWABLE SUBSTRATES (BY OTHERS) INCLUDE (BUT NOT LIMITED TO) WOOD, STEEL, STEEL STUDS, CONCRETE, CRACKED CONCRETE, CMU, AND/OR ALUMINUM. (1)
14. SUBSTRATE FOR CHANNEL FRAME SETUP: LIMITED TO WOOD, STEEL, STEEL STUDS, CONCRETE, CRACKED CONCRETE, GROUT FILLED CMU, AND/OR ALUMINUM. SUBSTRATES SHALL MEET THE MINIMUMS AS NOTED IN THE "SUBSTRATE AND FASTENER TABLE". (1)

REV 01: 2/3/25, MOVED GENERAL NOTES TO THIS NEW PAGE, ADDED SPEED TO TAS-201, ADDED BLADE POSITION TO AMCA 550, SPECIFIED ASD, GENERALIZED FL BLDG CODE, & ADDED NOTES 11 THRU 14.

PRODUCT REVISED
as complying with the Florida Building Code
NOA-No. 25-0317.02
Expiration Date 08/06/2030
By
Miami-Dade Product Control

ROBERT V. NANGIA
LICENSE
No. 69555
STATE OF FLORIDA
PROFESSIONAL ENGINEER

APR 04 2025

DRAWN BY BCB
DATE 4/1/15
SCALE
SHEET NO. 13 OF 14
CAD DRAWING NO. EVH-501D

GREENHECK
P.O.BOX 410 SCHOFIELD, WISCONSIN 54476-0410

TITLE
EVH-501D
CHANNEL & SLEEVE
GENERAL NOTES

ITEM 31, SUBSTRATE			ITEM 30, SUBSTRATE FASTENER										
TYPE	MATERIAL MIN.	THICKNESS MIN.	TYPE (ALL FASTENERS ARE HEX HEAD STYLE)	MAT'L	DIA.	HEIGHT MAX.	SPACING MAX.	EDGE MIN.	EMBED. MIN.	WASHER/FLANGE MIN.	ANGLE HOLE MAX	SUBSTRATE HOLE, MAX.
WOOD	G OF 0.42	3	LAG SCREW	300 SS ①	1/4	72	6	1 1/2	2 7/8	NA	1/4	SEE FASTENER MANUFACTURER INSTRUCTIONS
						120	3					
					3/8	72	9			13/16 AT HEAD	3/8	
						120	6					
STEEL	A36	16 GA	1/4-14 DEWALT/ELCO BI-FLEX SCREW (300 SS HEAD & SHANK W/COATED STEEL TIP), OR 1/4-20 BOLT & NUT ①	300 SS	1/4	72	6	13/16 ①	SHOWN GAGE VALUE	NA	5/16	5/16, FOR NUT CONNECTION ONLY
						120	3					
		14 GA	3/8-16 BOLT & NUT, OR 3/8-16 THREAD CUTTING/TAPPING SCREW ①		3/8	72	9	7/8 ①			13/32	3/8, FOR NUT CONNECTION ONLY
						120	6					
ALUMINUM	6063-T5	1/8	1/4-14 DEWALT/ELCO BI-FLEX SCREW (300 SS HEAD & SHANK W/COATED STEEL TIP), OR 1/4-20 BOLT & NUT ①	300 SS	1/4	72	6	13/16 ①	1/8	NA	5/16	1/4
						120	3					
			3/8-16 BOLT & NUT, OR 3/8-16 THREAD CUTTING/TAPPING SCREW ①		3/8	72	9	7/8 ①		3/4 AT NUT	13/32	3/8
						120	6					
CRACKED CONCRETE	2.5 KSI	VARIES WITH SIZE OF FASTENER USED, SEE FASTENER MANUFACTURER INSTRUCTIONS	HILTI KWIK HUS-EZ (KH-EZ)	316 SS	1/4	72	6	1 7/8	1 15/16	NA	3/8	SEE FASTENER MANUFACTURER INSTRUCTIONS
	3.0 KSI							1 3/4				
	4.0 KSI							1 1/2				
	4.0 KSI		HILTI KWIK BOLT TZ2 (KB-TZ2)	304 SS				2 1/8	1 1/2		5/16	
	5.0 KSI							1 3/4				
	2.5 KSI		HILTI KWIK HUS-EZ (KH-EZ)	316 SS		120	3	2	1 15/16		3/8	
	3.0 KSI							1 3/4				
	4.0 KSI							1 1/2				
	2.5 KSI		HILTI KWIK BOLT TZ2 (KB-TZ2)	304 SS				3 1/2	1 1/2		5/16	
	3.0 KSI							2 3/4				
	4.0 KSI							2	1 1/2			
	5.0 KSI							1 5/8				
	2.5 KSI		HILTI KWIK HUS-EZ (KH-EZ)	316 SS	3/8	72	9	2 9/16	2 9/16		1/2	
	3.0 KSI							1 3/4				
	4.0 KSI							1 5/8				
	5.0 KSI							1 1/2				
	2.5 KSI		HILTI KWIK BOLT TZ2 (KB-TZ2)	304 SS				2 1/2	2		7/16	
	2.5 KSI		HILTI KWIK HUS-EZ (KH-EZ)	316 SS		120	6	2 1/8	2 9/16		1/5	
	3.0 KSI							2	1 15/16			
	4.0 KSI							1 3/4	2 9/16			
	5.0 KSI							1 5/8	1 15/16			
①	2.5 KSI		HILTI KWIK BOLT TZ2 (KB-TZ2)	304 SS				2 1/2	2		7/16	
GROUT FILLED CMU	NOTE 1		HILTI HY 270 & THREADED ROD ①	300 SS	1/2	72	6	2 5/8	4 1/2	NA	9/16	SEE FASTENER MANUFACTURER INSTRUCTIONS
						120	3	2 3/4				

NOTE 1: CONCRETE MASONRY (CMU) SHALL BE ≥ THE FOLLOWING; 8" WIDE, 2 KSI CMU CONFORMING TO ASTM C-90 WITH 1624 KSI GROUT. ①

REV 01: 2/3/25, WAS PAGE 9, REMOVED ALL POWERS WEDGE BOLTS & ALL SCOTS TAPCON ANCHORS & ALL ELCO ANCHORS FROM CONCRETE & CMU, ADDED "CRACKED" TO CONCRETE, ALL ANCHOR MAT'L NOW SS, ALL CONCRETE ANCHORS ARE NOW HILTI KWIK HUS EZ OR HILTI KWIK BOLT TZ2, ALL CMU ANCHOR NOW HILTI HY-270 & THREADED ROD, STEEL & ALUMINUM SCREWS NOW SPECIFICALLY 1/4-14 DEWALT BI-FLEX, UPDATED MIN. EDGE DISTANCES FOR STEEL AND ALUMINUM, REMOVED "**" FROM MATERIAL COLUMN, REMOVED "*" FROM MAX SPACING COLUMN, REMOVED NOTES "*" & "**" & 2 & 3, & MODIFIED NOTE 1 FOR WIDTH & PRESSURES.

PRODUCT REVISED
as complying with the Florida Building Code
NOA-No. 25-0317.02
Expiration Date 08/06/2030
By
Miami-Dade Product Control

DATE 4/1/15
DRAWN BY BCB
SCALE
SHEET NO. 14 OF 14
CAD DRAWING NO. EVH-501D

GREENHECK
P.O.BOX 410 SCHOFIELD, WISCONSIN 54476-0410

TITLE
EVH-501D
CHANNEL FRAME
SUBSTRATE REQUIREMENTS
& SUBSTRATE ANCHOR CHART

ROBERT V. NANGLE
LICENSE
No. 69555
STATE OF FLORIDA
PROFESSIONAL ENGINEER